MV-7HQ-S
MV-10HQ-S

Vehicle LCD monitors with quad display and human detection

Product description

These LCD monitors are specifically designed for installation in vehicles. Aviation connectors allow our vehicle cameras with matching connectors to be connected using a single cable.





Package contents

- Monitor with mounting bracket
- Connection cable
- Infrared remote control

Compatible cameras

The monitor supports all analog cameras using the traditional CVBS format, as well as high-resolution AHD 720P and 1080P analog cameras.
The camera video format can be selected in the settings menu. The factory default is AHD 1080P.
WARNING - The video format setting applies to all 4 channels. Cameras with different video signal formats cannot be used at the same time.

Installation

The monitor has an adjustable bracket for desktop, wall or ceiling mounting.
Use the side knobs to adjust the screen angle.
If required, remove the bracket for flush mounting.

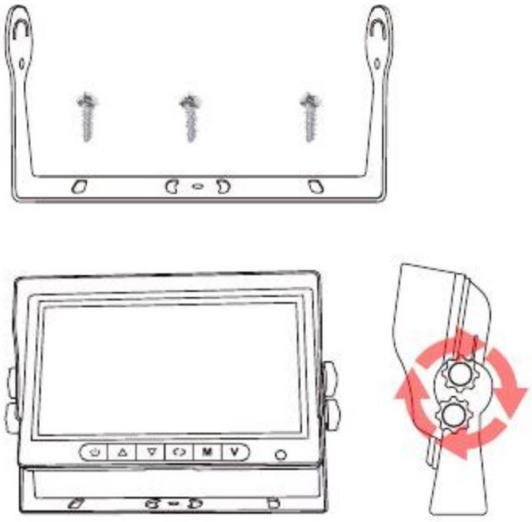

Connections

The monitor is supplied with a connection cable that plugs into the multipin connector on the cable extending from the monitor.
The connectors at the other end of the cable are used to connect the system.

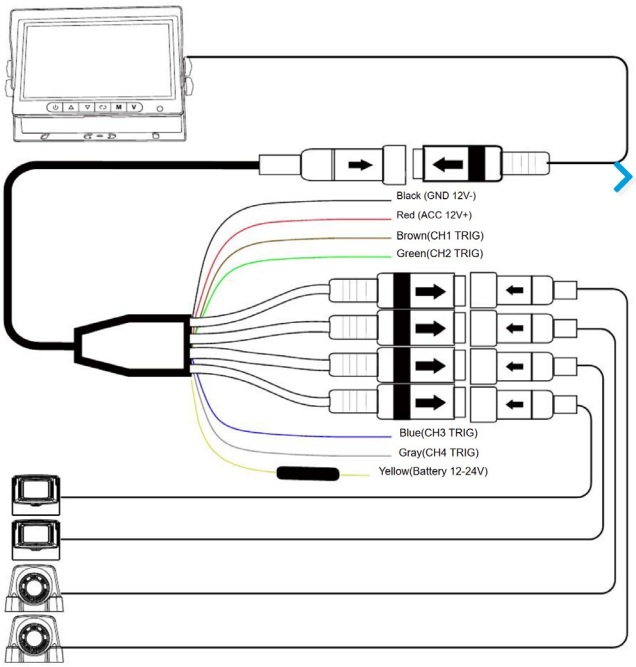



A - MONITOR - Connect the multipin connector to the cable extending from the monitor.
B - CAMERAS - The monitor has 4 Aviation connectors for up to 4 cameras. Use the dedicated ready-made Aviation cables, purchased separately in the required length. Each connection receives video from the camera and supplies power to it at the same time. The monitor can display one camera at a time or all cameras together, with several layout options.
C - POWER SUPPLY - The monitor operates on a DC supply from 10 to 36VDC, making it suitable for vehicles with either 12V or 24V batteries.
Connect negative to the black GND wire and positive to the yellow 12-24V wire. Connect the ACC wire to a vehicle electrical output that supplies voltage only when the ignition is on. The monitor will then switch on automatically when the vehicle is started.
For use outside a vehicle, connect positive to both the 12-24V and ACC wires to switch the monitor on.
D - TRIGGER - Additional coloured wires are provided, normally one per channel. Applying positive 12VDC to a trigger wire displays the corresponding channel in full screen. This allows automatic switching between views without pressing a button, for example when shifting from forward driving to reverse. In vehicles, obtain the 12VDC signal from electrical outputs that become active under the required operating conditions.

SD card

The monitor can record to an SD card both while driving and while parked. Insert an SD card, or a microSD card with an SD adapter, into the side slot. SD cards up to 32GB are supported, providing up to 40 hours of continuous recording from one camera.
For greater capacity, cards up to 512GB can be used, but video files can then be played back only on a computer, not directly on the monitor.
After inserting the card, format it in the configuration menu before use.

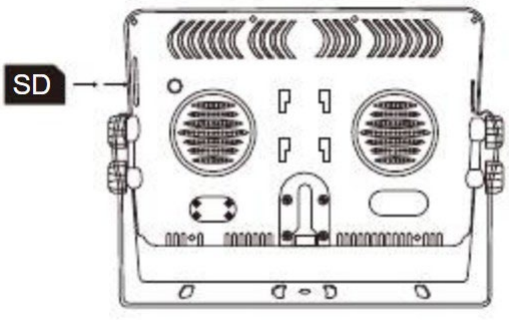

The monitor saves video files in .TS format, playable with any standard media player. A 5-minute file typically occupies less than 100 MB.

Remote control

The monitor can be operated using the front panel buttons or the remote control.

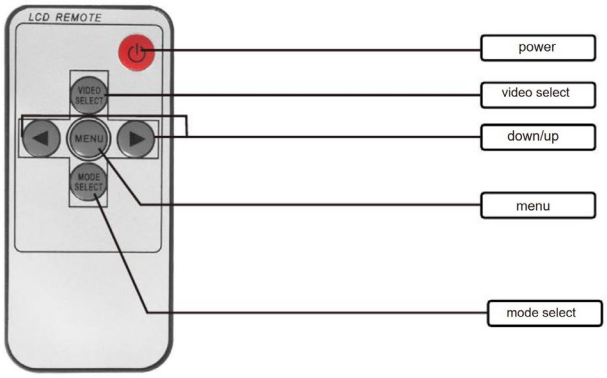

MV-7HQ-S front panel buttons



A- Power on/off
B- EXIT button for menu navigation
C- Move up/left in the menu
D- Open the menu
E- Move down/right in the menu
F- Display cameras 1,2,3,4 in full screen, in sequence with each press

MV-10HQ-S front panel buttons



A. ENTER button for menu items
B. Display cameras 1,2,3,4 in full screen, in sequence with each press
C. Move up/left in the menu
D. Open the menu / EXIT within the menu
E. Move down/right in the menu
F. Power on/off

Operating the monitor

The monitor switches on automatically when 12V+ is present on both the yellow and red wires. Press the power button to switch the monitor on or off while the vehicle is running.
Press the channel selection button to display video inputs 1,2,3,4 and a multi-camera view (2,3 or 4 windows, selectable in the configuration menu).



Configuration menu

Press the MENU button to open the configuration menu.

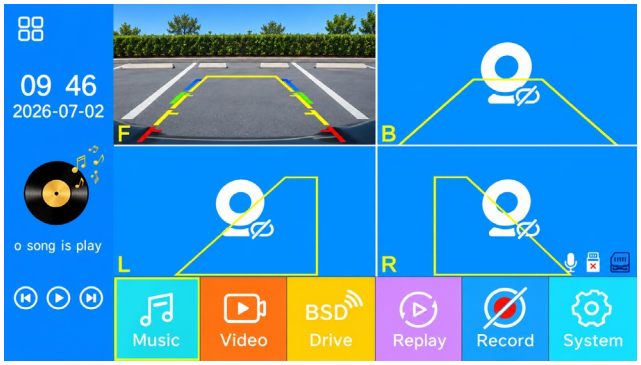

MUSIC/VIDEO - Functions not enabled on these models
DRIVE BSD (blind spot detection) - Configure intelligent detection and anti-theft functions (see below).
REPLAY - Play files recorded on the SD card (see below).
RECORD - Stop or start SD card recording.
SYSTEM - Open the settings menu (see below).

DETECTION AREAS: The monitor overlays each camera's intelligent detection areas as yellow boxes. If intelligent detection is not required, disable it in the settings and the yellow boxes will no longer appear.

BSD DRIVE

These monitors feature intelligent detection of people and/or vehicles and can alert the driver.

Use the BSD (blind spot detection) section to configure intelligent detection and anti-theft functions.

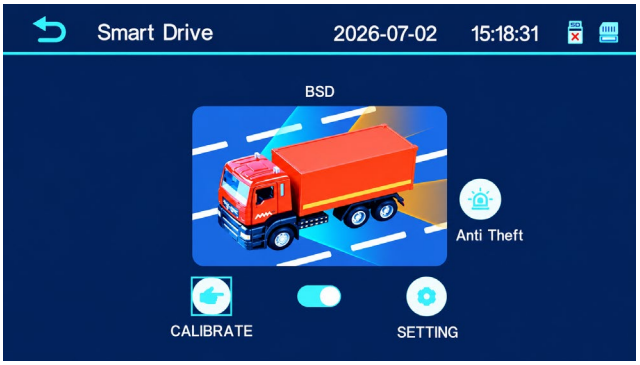

CALIBRATE
For each camera, draw the detection area in which intelligent human and/or vehicle detection will operate.



SETTING
Settings for intelligent human and vehicle detection

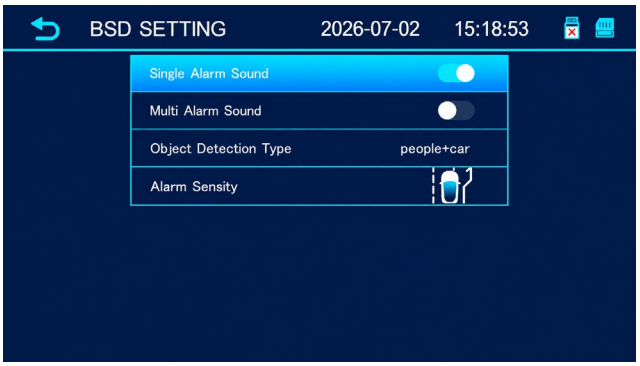

SINGLE ALARM SOUND - Display an on-screen indication when detection occurs.
MULTI ALARM SOUND - Play an audible warning message when detection occurs.
OBJECT DETECTION TYPE - Detect people only, vehicles only, or both people and vehicles.
ALARM SENSITIVITY - Adjust detection sensitivity.

ANTITHEFT
Configure anti-theft functions that operate while the vehicle is stationary and parked.



INTERVAL RECORD - When the monitor is switched off, recording continues for the selected duration, using little storage space (1 frame/sec).
ANTITHEFT - Select the side of the vehicle where the fuel tank is located to detect activity in that area.
ALARM SENSITIVITY - Set detection sensitivity.

REPLAY

Review recordings stored on the SD card here.

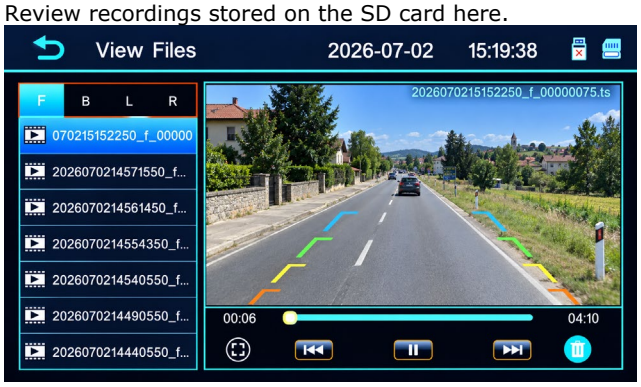

SYSTEM

Select SYSTEM to configure all monitor options.

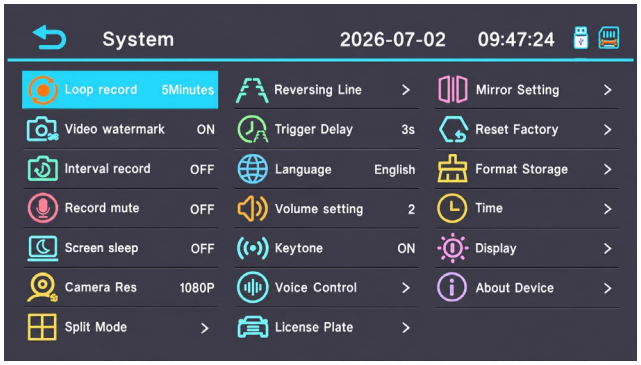

LOOP RECORD - Set the duration of individual video recording files (3/5 minutes).
VIDEO WATERMARK - Enable an identifying data overlay in video recordings.
INTERVAL RECORD - When the vehicle is switched off, the monitor can continue recording for security purposes at one frame per second to save storage space. Set the time-lapse recording duration here: OFF, 1, 12 or 24 hours.
RECORD MUTE - Enable audio recording.
SCREEN SLEEP - Set the screen to switch off automatically after a period of inactivity.
CAMERA RES - Set the camera video resolution: AHD 1080P, AHD 720P or CVBS. This setting applies to all 4 channels, so cameras with different video signal formats cannot be connected at the same time. The factory default is AHD1080P.
SPLIT MODE - Set the screen layout for multi-camera viewing. Select 2, 3 or 4 cameras.
REVERSING LINE - Enable parking guideline overlays, either continuously or only when reversing.
TRIGGER DELAY - When using trigger wires to display a camera in full screen, set a delay between application of the 12V signal and the camera appearing in full screen.
LANGUAGE - English only.
VOLUME SETTING - Set the playback volume of voice alerts.
KEYTONE - Enable a confirmation tone when buttons are pressed.
VOICE CONTROL - Not available.
LICENSE PLATE - Enter the vehicle registration number to identify video recordings.
MIRROR SETTING - Enable horizontal image reversal (Mirror) separately for each camera. This function is normally used for cameras facing opposite to the direction of travel.
RESET FACTORY - Restore factory settings.
FORMAT STORAGE - Format the SD memory card. Format an SD card before using it for the first time. Formatting deletes all data stored on the card.
TIME - Set the monitor date and time.
DISPLAY - Set screen brightness, contrast and saturation.
ABOUT DEVICE - Display the firmware version.

CE